Installation Guidelines Steering Gears

Do the Job Right the First Time!

Installing a steering gear box from another vehicle that has not been professionally rebuilt and reset to original FACTORY NEW INSTALL settings will lead vehicle to steering interruption resulting in steering lock up. To ensure you do the job right the first time, never replace a steering gear box with a used unit. Instead make sure to replace gear box with a quality remanufactured unit set to factory specifications.

Important Guidlines to Ensure Proper Steering Box Installation

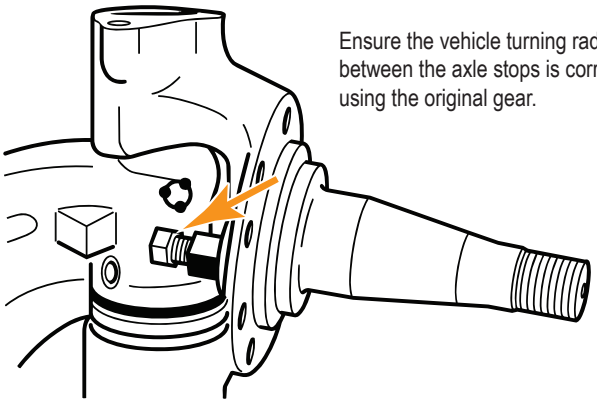

Ensure the vehicle turning radius between the axle stops is correct using the original gear.

100% **DYNO TESTED**

All steering gears have been 100% dyno tested and reset to original factory specifications.

1. **Before you remove the original gear box for replacement:**
   - Inspect the axle stops to ensure they are in place, secure and in good condition
   - Ensure the vehicle turning radius between the axle stops is correct using the original gear • Check steering gear output shaft timing to pitman arm marks are correct and visible to re-use
2. **Before you install a replacement steering gear:**
   - Do not turn steering gear from stop to stop prior to complete installation on the vehicle Ensure the vehicle turning radius between the axle stops is correct using the original gear
   - For automatic steering gears - ensure steering poppets have been replaced or reset to the original factory settings
3. **Mount steering gear onto frame of vehicle & secure to OEM specifications.**
4. **Unload the steering gear axle by lifting the front wheels off the ground.**
5. **Always center steering gear visually before final installation:**
   - Never fully rotate steering gear input shaft by moving the piston to end of travel
   - Align timing marks or center the piston assembly
   - Align wheels to straight ahead position
   - Install pitman arm (confirm timing marks are correct), connect steering column & hoses
   - Fill system with correct fluid specified for unit
   - With the vehicle running; turn steering to the right axle stop and hold firmly for 5 seconds. Repeat to the left axle stop. Bleed system as required. Load steering axle wheels and complete the installation.
   - With older steering systems, you may be required to adjust the manual poppets

Without Timing Marks

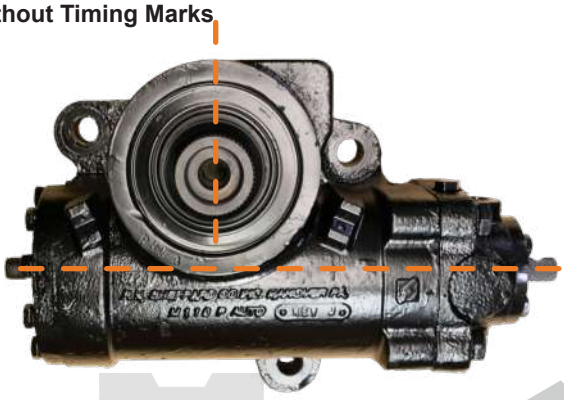

If no timing mark on the housing, alint the ouput shaft 90 degrees of the piston line of travel.

With Timing Marks

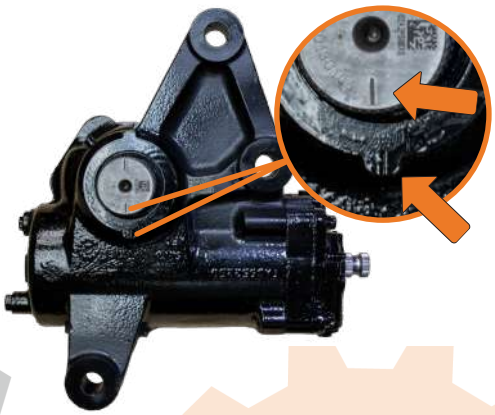

Confirm timing marks on the housing output and shaft are aligned.